UNIVERSITY OF CAMBRIDGE INTERNATIONAL EXAMINATIONS
General Certificate of Education
Advanced Subsidiary Level and Advanced Level

CANDIDATE NAME	
CENTRE NUMBER	
CANDIDATE NUMBER	

7714514366

PHYSICS **9702/21**

Paper 2 AS Structured Questions **October/November 2010**

1 hour

Candidates answer on the Question Paper.

No Additional Materials are required.

READ THESE INSTRUCTIONS FIRST

Write your Centre number, candidate number and name on all the work you hand in.
Write in dark blue or black pen.
You may use a soft pencil for any diagrams, graphs or rough working.
Do not use staples, paper clips, highlighters, glue or correction fluid.
DO **NOT** WRITE IN ANY BARCODES.

Answer **all** questions.
You may lose marks if you do not show your working or if you do not use appropriate units.

At the end of the examination, fasten all your work securely together.
The number of marks is given in brackets [ ] at the end of each question or part question.

For Examiner's Use	
1	
2	
3	
4	
5	
6	
7	
Total	

This document consists of **15** printed pages and **1** blank page.

© UCLES 2010

Data

speed of light in free space,	$c = 3.00 \times 10^{8}\ \text{m s}^{-1}$
permeability of free space,	$\mu_0 = 4\pi \times 10^{-7}\ \text{H m}^{-1}$
permittivity of free space,	$\varepsilon_0 = 8.85 \times 10^{-12}\ \text{F m}^{-1}$
elementary charge,	$e = 1.60 \times 10^{-19}\ \text{C}$
the Planck constant,	$h = 6.63 \times 10^{-34}\ \text{J s}$
unified atomic mass constant,	$u = 1.66 \times 10^{-27}\ \text{kg}$
rest mass of electron,	$m_e = 9.11 \times 10^{-31}\ \text{kg}$
rest mass of proton,	$m_p = 1.67 \times 10^{-27}\ \text{kg}$
molar gas constant,	$R = 8.31\ \text{J K}^{-1}\ \text{mol}^{-1}$
the Avogadro constant,	$N_A = 6.02 \times 10^{23}\ \text{mol}^{-1}$
the Boltzmann constant,	$k = 1.38 \times 10^{-23}\ \text{J K}^{-1}$
gravitational constant,	$G = 6.67 \times 10^{-11}\ \text{N m}^2\ \text{kg}^{-2}$
acceleration of free fall,	$g = 9.81\ \text{m s}^{-2}$

© UCLES 2010

Formulae

uniformly accelerated motion, $s = ut + \frac{1}{2}at^2$
$v^2 = u^2 + 2as$

work done on/by a gas, $W = p\Delta V$

gravitational potential, $\phi = -\frac{Gm}{r}$

hydrostatic pressure, $p = \rho gh$

pressure of an ideal gas, $p = \frac{1}{3}\frac{Nm}{V}\langle c^2 \rangle$

simple harmonic motion, $a = -\omega^2 x$

velocity of particle in s.h.m., $v = v_0 \cos \omega t$
$v = \pm \omega \sqrt{(x_0^2 - x^2)}$

electric potential, $V = \frac{Q}{4\pi\varepsilon_0 r}$

capacitors in series, $1/C = 1/C_1 + 1/C_2 + \ldots$

capacitors in parallel, $C = C_1 + C_2 + \ldots$

energy of charged capacitor, $W = \frac{1}{2}QV$

resistors in series, $R = R_1 + R_2 + \ldots$

resistors in parallel, $1/R = 1/R_1 + 1/R_2 + \ldots$

alternating current/voltage, $x = x_0 \sin \omega t$

radioactive decay, $x = x_0 \exp(-\lambda t)$

decay constant, $\lambda = \frac{0.693}{t_{\frac{1}{2}}}$

© UCLES 2010

[Turn over

Answer **all** the questions in the spaces provided.

1 **(a)** Two of the SI base quantities are mass and time. State three other SI base quantities.

1. .....

2. .....

3. .....

[3]

(b) A sphere of radius r is moving at speed v through air of density ρ. The resistive force F acting on the sphere is given by the expression

$$F = Br^2\rho v^k$$

where B and k are constants without units.

(i) State the SI base units of F, ρ and v.

F .....

ρ .....

v .....

[3]

(ii) Use base units to determine the value of k.

$k =$ ..... [2]

© UCLES 2010

BLANK PAGE

Please turn over for Question 2.

2 A ball is thrown horizontally from the top of a building, as shown in Fig. 2.1.

For Examiner's Use

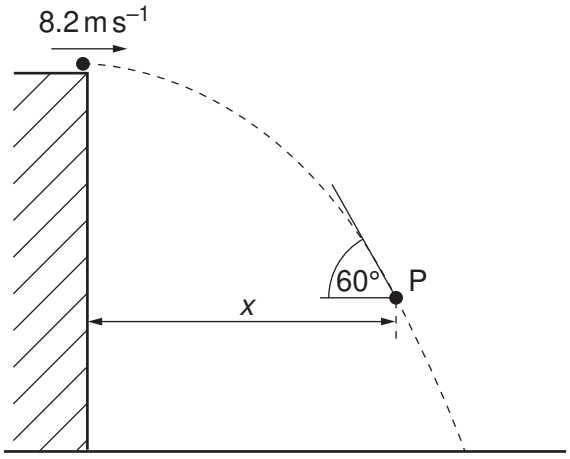

Fig. 2.1

The ball is thrown with a horizontal speed of $8.2\,m\,s^{-1}$. The side of the building is vertical. At point P on the path of the ball, the ball is distance x from the building and is moving at an angle of 60° to the horizontal. Air resistance is negligible.

(a) For the ball at point P,

(i) show that the vertical component of its velocity is $14.2\,m\,s^{-1}$,

[2]

(ii) determine the vertical distance through which the ball has fallen,

distance = ... m [2]

(iii) determine the horizontal distance x.

For Examiner's Use

x = ... m [2]

(b) The path of the ball in **(a)**, with an initial horizontal speed of $8.2\,m\,s^{-1}$, is shown again in Fig. 2.2.

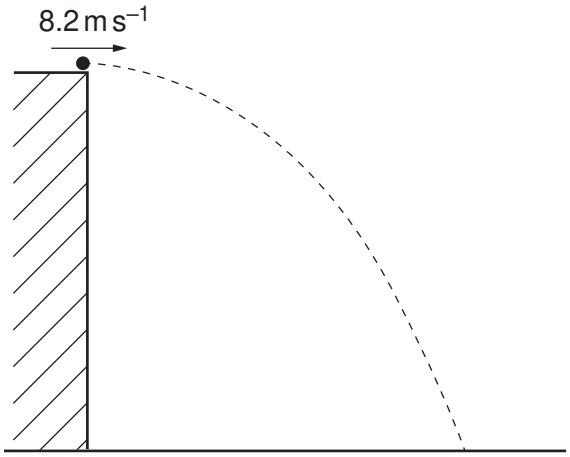

Fig. 2.2

On Fig. 2.2, sketch the new path of the ball for the ball having an initial horizontal speed

(i) greater than $8.2\,m\,s^{-1}$ and with negligible air resistance (label this path G), [2]

(ii) equal to $8.2\,m\,s^{-1}$ but with air resistance (label this path A). [2]

© UCLES 2010

3 **(a)** State the relation between force and momentum.

..... [1]

(b) A rigid bar of mass 450 g is held horizontally by two supports A and B, as shown in Fig. 3.1.

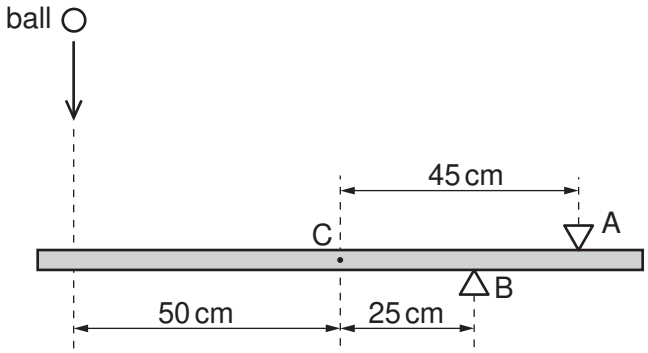

Fig. 3.1

The support A is 45 cm from the centre of gravity C of the bar and support B is 25 cm from C.

A ball of mass 140 g falls vertically onto the bar such that it hits the bar at a distance of 50 cm from C, as shown in Fig. 3.1.
The variation with time t of the velocity v of the ball before, during and after hitting the bar is shown in Fig. 3.2.

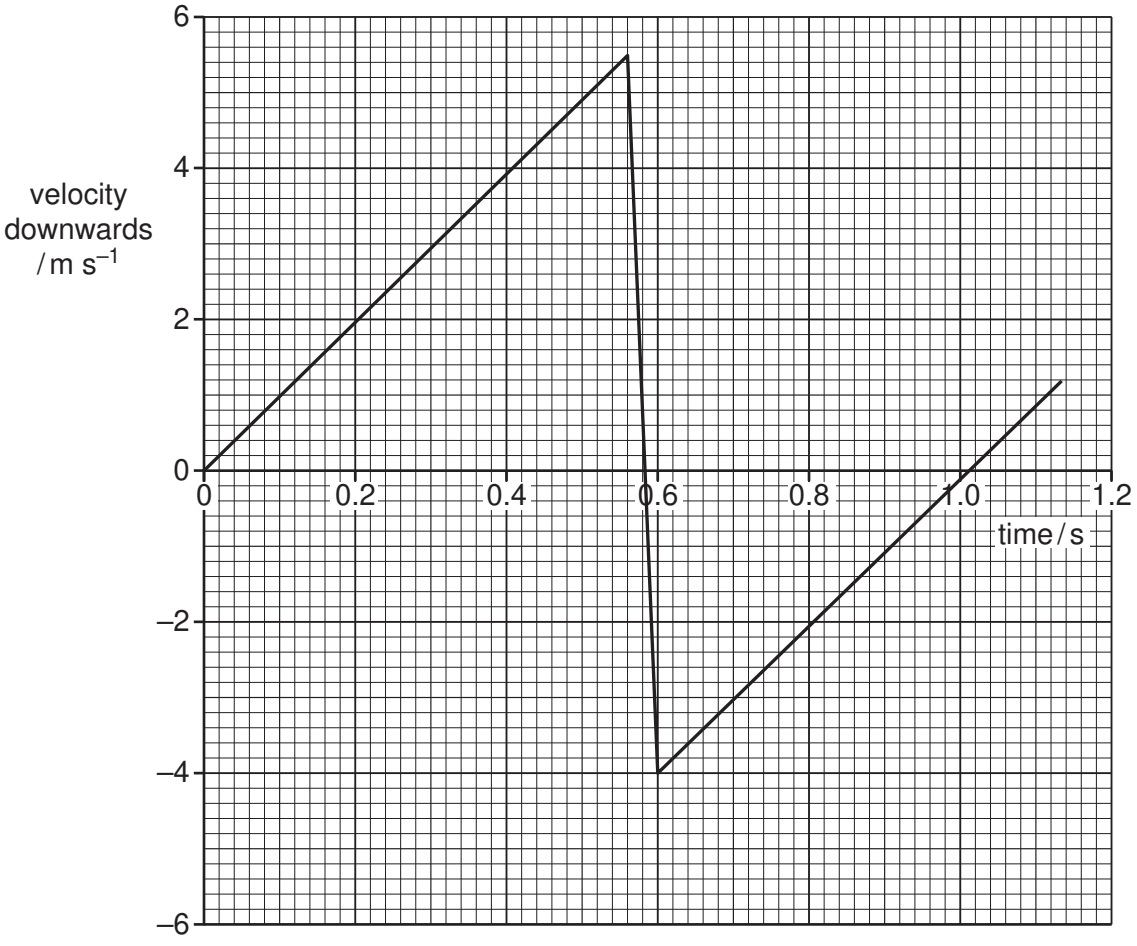

Fig. 3.2

For the time that the ball is in contact with the bar, use Fig. 3.2

(i) to determine the change in momentum of the ball,

change = ... $kg\,m\,s^{-1}$ [2]

(ii) to show that the force exerted by the ball on the bar is 33 N.

[1]

(c) For the time that the ball is in contact with the bar, use data from Fig. 3.1 and **(b)(ii)** to calculate the force exerted on the bar by

(i) the support A,

force = ... N [3]

(ii) the support B.

force = ... N [2]

© UCLES 2010

4 **(a)** A uniform wire has length L and constant area of cross-section A.
The material of the wire has Young modulus E and resistivity ρ.
A tension F in the wire causes its length to increase by ΔL.

For this wire, state expressions, in terms of L, A, F, ΔL and ρ for

(i) the stress σ,

..... [1]

(ii) the strain ε,

..... [1]

(iii) the Young modulus E,

..... [1]

(iv) the resistance R.

..... [1]

(b) One end of a metal wire of length 2.6 m and constant area of cross-section $3.8 \times 10^{-7}\,m^2$ is attached to a fixed point, as shown in Fig. 4.1.

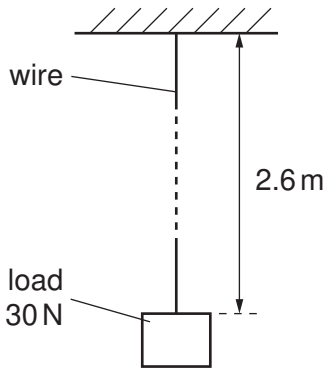

Fig. 4.1

© UCLES 2010

The Young modulus of the material of the wire is 7.0×10^{10} Pa and its resistivity is $2.6 \times 10^{-8}\,\Omega$ m.
A load of 30 N is attached to the lower end of the wire. Assume that the area of cross-section of the wire does not change.
For this load of 30 N,

(i) show that the extension of the wire is 2.9 mm,

[1]

(ii) calculate the change in resistance of the wire.

change = ... Ω [2]

(c) The resistance of the wire changes with the applied load.
Comment on the suggestion that this change of resistance could be used to measure the magnitude of the load on the wire.

.....

.....

..... [2]

5 **(a)** State what is meant by the *diffraction* of a wave.

.....

.....

..... [2]

(b) Plane wavefronts are incident on a slit, as shown in Fig. 5.1.

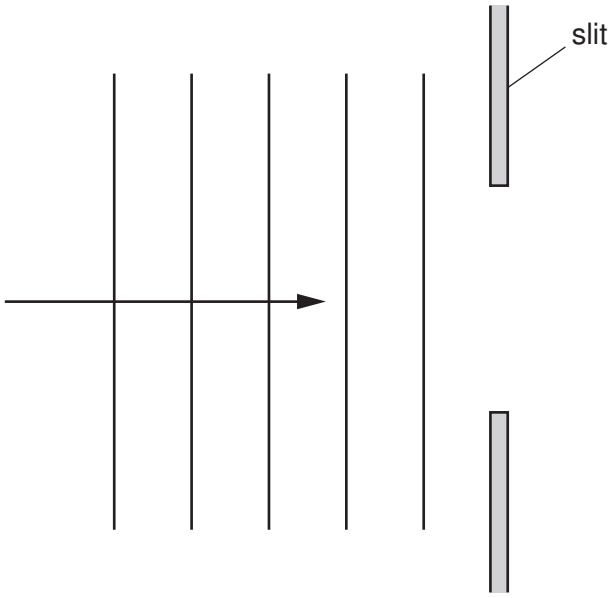

Fig. 5.1

Complete Fig. 5.1 to show four wavefronts that have emerged from the slit. [2]

© UCLES 2010

(c) Monochromatic light is incident normally on a diffraction grating having 650 lines per millimetre, as shown in Fig. 5.2.

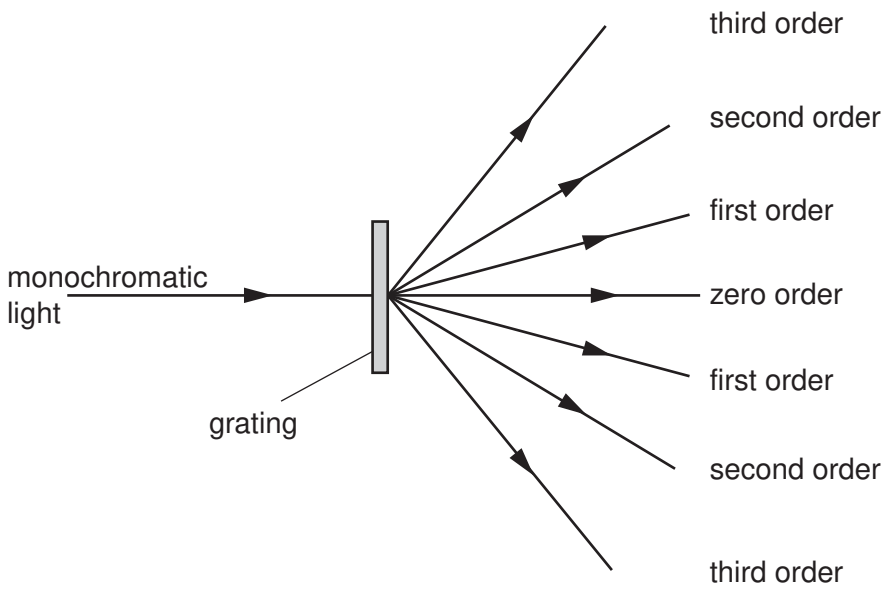

Fig. 5.2

An image (the zero order) is observed for light that has an angle of diffraction equal to zero.

For incident light of wavelength 590 nm, determine the number of orders of diffracted light that can be observed on each side of the zero order.

number = ... [3]

(d) The images in Fig. 5.2 are viewed, starting with the zero order and then with increasing order number.
State how the appearance of the images changes as the order number increases.

.....

..... [1]

© UCLES 2010

6 **(a)** A lamp is rated as 12V, 36W.

(i) Calculate the resistance of the lamp at its working temperature.

resistance = ... Ω [2]

(ii) On the axes of Fig. 6.1, sketch a graph to show the current-voltage (*I*–*V*) characteristic of the lamp. Mark an appropriate scale for current on the *y*-axis.

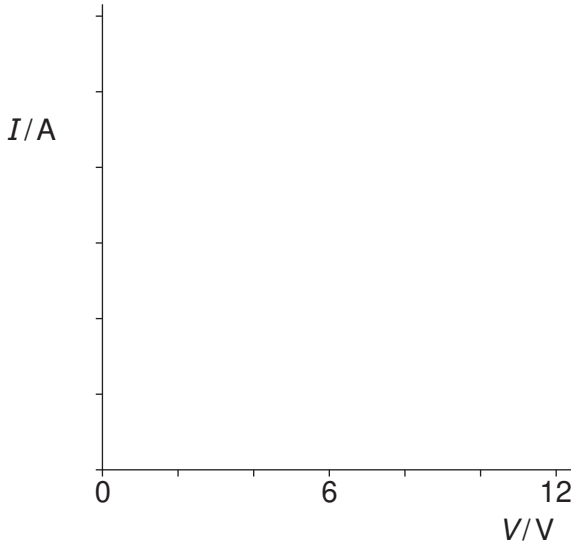

Fig. 6.1

[3]

(b) Some heaters are each labelled 230 V, 1.0 kW. The heaters have constant resistance.

Determine the total power dissipation for the heaters connected as shown in each of the diagrams shown below.

(i)

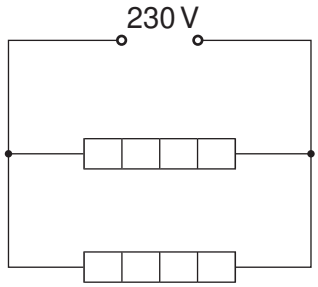

power = ... kW [1]

(ii)

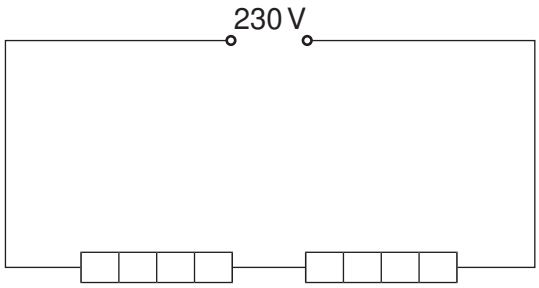

power = ... kW [1]

(iii)

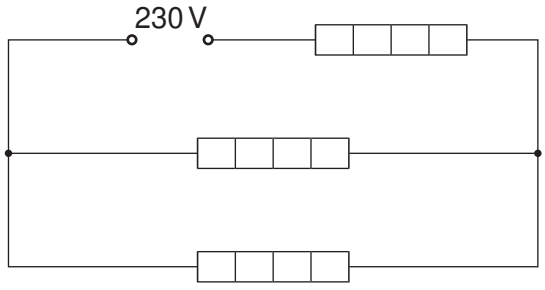

power = ... kW [2]

7 **(a)** Uranium (U) has at least fourteen isotopes.
Explain what is meant by *isotopes*.

.....

.....

..... [2]

(b) One possible nuclear reaction involving uranium is

$$^{235}_{92}\text{U} + {}^{1}_{0}\text{n} \longrightarrow {}^{141}_{56}\text{Ba} + {}^{92}_{Z}\text{Kr} + x\,{}^{1}_{0}\text{n} + \text{energy.}$$

(i) State three quantities that are conserved in a nuclear reaction.

1. .....

.....

2. .....

.....

3. .....

.....
[3]

(ii) For this reaction, determine the value of

1. Z,

$Z =$ ..... [1]

2. x.

$x =$ ..... [1]

Permission to reproduce items where third-party owned material protected by copyright is included has been sought and cleared where possible. Every reasonable effort has been made by the publisher (UCLES) to trace copyright holders, but if any items requiring clearance have unwittingly been included, the publisher will be pleased to make amends at the earliest possible opportunity.

University of Cambridge International Examinations is part of the Cambridge Assessment Group. Cambridge Assessment is the brand name of University of Cambridge Local Examinations Syndicate (UCLES), which is itself a department of the University of Cambridge.